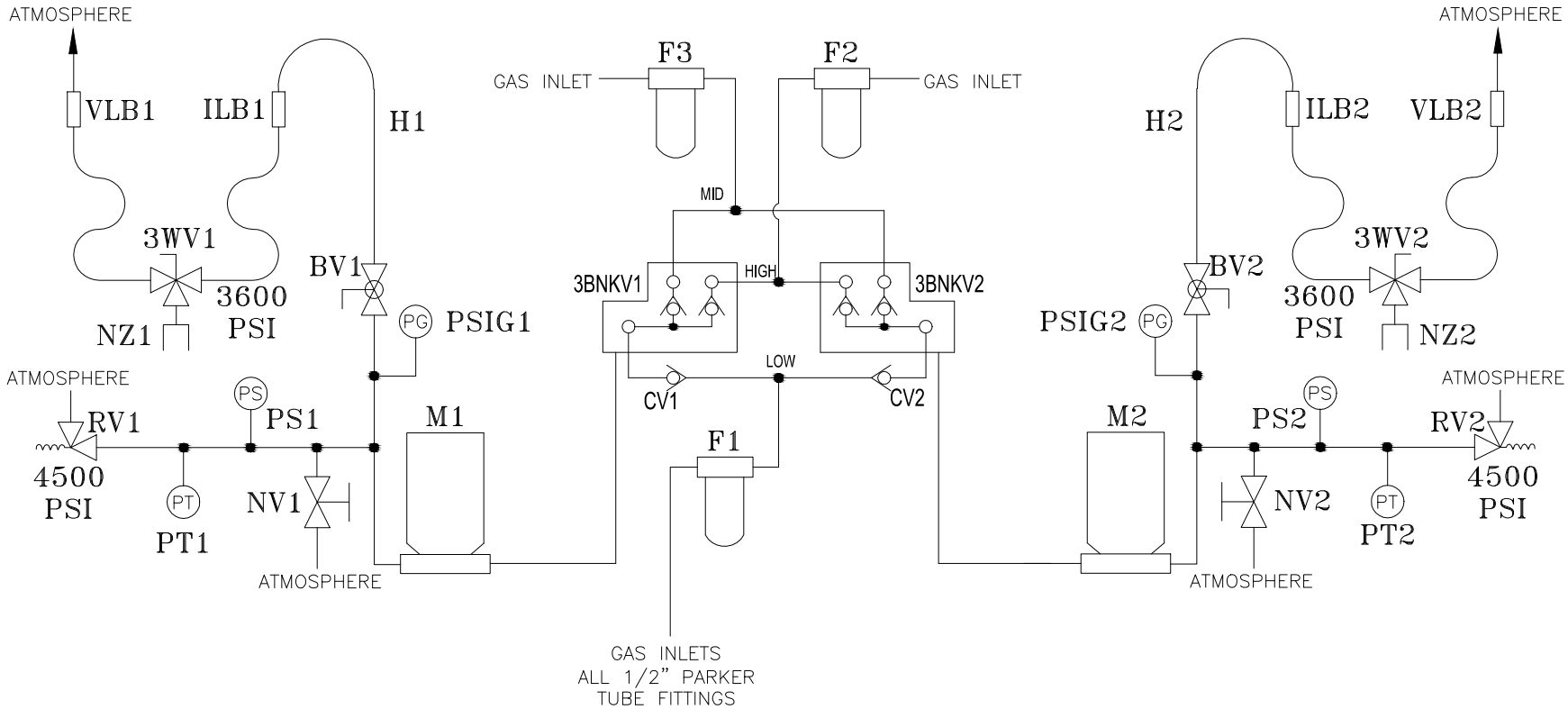

BV1, BV2.....1/2" BALL VALVE, PARKER 62 SERIES
CV1,2.....3/8" CHECK VALVE, PARKER 6A-C6L-1-SS
F1,2,3.....FILTER, TGT A-1-8515C-N.3MA-BS6
H1,2.....HOSE, PARKER PARFLEX 3/8" - 1/8" VENT
ILB1,2.....INLINE BREAKAWAY, TGT 6ILB
M1,2.....METER, MICRO MOTION SENSOR MM-CNG050S290NCAAEZZZ
MICRO MOTION TRANSMITTER MM-2700I13ABEZZZ
NV1,2.....NEEDLE VALVE, PARKER 4M-V4LR-SS-ST
NZ1,2.....NOZZLE,STAUBLI P36
PSIG1,2.....2.5" GAUGE 5000PSI, TGT
PS1,2.....PRESSURE SENSOR, NASON CD-1C-4500/WL93
PT1,2.....PRESSURE TRANSMITTER, ASHCROFT G27M02RMG25000#G
RV1,2.....RELIEF VALVE, MERCER SERIES 14
VLB1,2.....VENT LINE BREAKAWAY, TGT-VLB
3BNKV1,2.....3 BANK VALVE, TGT SV-3-8
3WV1,2.....THREE-WAY VALVE, SWAGELOK SS-L83XKF4

TUBING: 1/2" X 0.065" 316 STAINLESS

TULSA GAS TECHNOLOGIES, INC.
4809 South 101st East Avenue
Tulsa, OK 74146
(918) 665-2641 FAX: (918) 665-2657

MODEL:	DRAWN BY: MB	DATE
SEQUENCE –	CHECKED BY: –	07/30/20
PROGRAM: –	APPROVED BY: –	
SERIAL NO.: –	PART: –	
WORK ORDER: –	DWG. NO. T7203-8CNG50W P&ID	
	1/2", 3 BANK ELEC VALVE	